EXPERIMENT 1

DIODES AND APPLICATIONS

1.1 Objectives

In this experiment,

1. Several diode circuits will be designed.
2. The performances of several diode circuits will be determined.

1.2 Equipment List

1. Signal Generator, DC Power Supply, Multi-meter, Oscilloscope,
2. Diodes (2 x 1N4007),
3. Resistors (1 kΩ, 2.2 kΩ),
4. Capacitor (10 μF).

1.3 Preliminary Work

1) Study diode characteristics

2) Study diode applications such as half-wave rectifier, clipper and clamper etc.

(You can find information about diodes on the documents named "Notes on Semiconductor Diodes" and "Half and Full Wave Rectifiers" from course webpage).

1.4 Experimental Procedure

1) For the circuit of Fig. 1, choose values of R_L=2.2 kΩ and C=10 μF. Draw the output waveform when the input is sinusoidal of frequency 100 Hz and 20 V peak to peak, under the following cases:

- Remove Capacitor out. Plot the transfer characteristics (V_{out} versus V_{in}).
- Connect capacitor and remove Resistor out.
- Capacitor and resistor are both in place. Calculate the peak-to-peak ripple voltage.

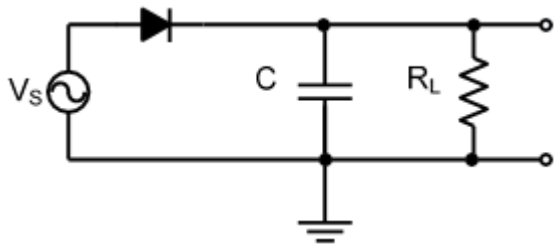

Figure 1. Half-wave Rectifier Circuit with Capacitor

2) Construct the circuit in Fig. 2. Apply an input signal as sinusoid of amplitude 10 V_{PP} and frequency 50 Hz. Display and plot the input and output waveforms on the oscilloscope simultaneously. Display the V_{out} vs. V_{in} transfer characteristics of the circuit on the oscilloscope using XY facility of DSO. (R=1 kΩ, V_1=2 V, V_2=5 V). What is your observation on output? Is it expected value? Why?

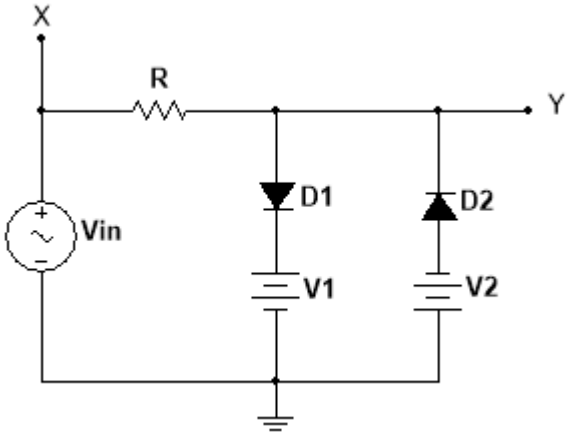

Figure 2. Parallel Clipper Circuit

3) Construct the circuit given in Fig. 3 and apply $V_{in}(t) = 10\sin(100\pi t)$ as an input signal. Observe and plot input and output waveforms from the points X and Y, respectively. (C=10 μF, V_1=2 V). What is your observation on output? Is it expected value? Why?

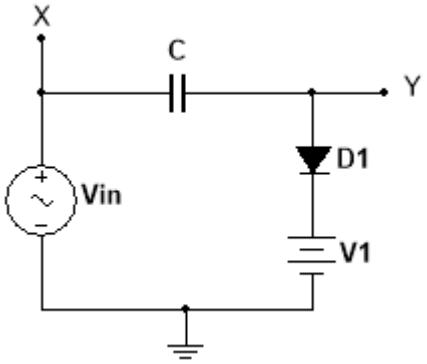

Figure 3. Clamper Circuit